Aluminess Products Inc
Info@Aluminess.com
619-449-9930

CHEVY EXPRESS TIRE RACK

PN: 210057.1



Compatible Vehicles

- 2003-2014 Chevrolet Express 1500
- 2003-2025 Chevrolet Express 2500
- 2003-2025 Chevrolet Express 3500
- 2003-2025 GMC Savana
- 2009-2025 Chevrolet Express 4500

Please read before beginning

- *Stainless steel hardware may bind together when tightening—It is recommended that you apply an anti-seize assembly lubricant to the threads of each bolt before assembly*
- *Unless otherwise specified, refer to the general torque value at the end of the instructions for specified torque values.*

Required Tools

- Drill and 1/4” drill bit
- Standard wrench set
- Allen wrench set
- Center punch or scribing tool

Included Hardware	*Qty*
70008 – 1/4”-20 Nylock Nut SS	2
70009 – 1/4” Flat Washer SS	4
70014 - 1/4-20x1-1/4" Button Head Screw SS	2
70027 - Washer, Flat, SS, 3/8 ID x 1 OD x 1/8 Thick	2
70028 – Washer, Flat, SS, 3/8 ID x 7/8 OD	2
70019 - Nut, Nylock, SS, 5/16 -18	2
70037 - Bolt, Shoulder, SS, 3/8 x 1-1/2"	2
300187 – Machined Delrin Bearings	2
70246 – Anti-seize Packet, 2g	1
70030 – 3/8”-16 x 1 ½” Counter Bore Screw	4
70028 – 3/8” Flat Washer SS	4
70024 – Nut, Nylock, SS, 3/8”-16	4

Included Parts	*Qty*
Van Attachment Pole w/ Mounting Bracket	1
Swing Arm w/ Hinge and Latch	1

Aluminess Products Inc
Info@Aluminess.com
619-449-9930

Additional Parts:

Description	*Quantity*	*Picture*
351517 – Chevy Tire Rack Swing Arm	1 ea.	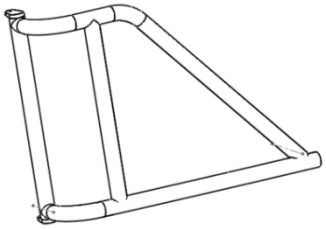
350335 – Chevy Tire Rack Hinge Pole	1 ea.	
350212 – Latch Pin (Chevy) SS	1 ea	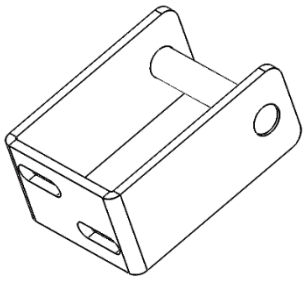

Installation Instructions:

1. The Chevy tire rack will bolt to the door hinges on the driver side.
2. The Machined Delrin Bearings (300187) fit between the fixed hinge bracket and the swing arm bracket. Using the Shoulder Bolt (70037), one thick washer (70027), one thin washer (70028), one Nylock Nut (70019), assemble the swing arm to the vertical pole.

Aluminess Products Inc
Info@Aluminess.com
619-449-9930

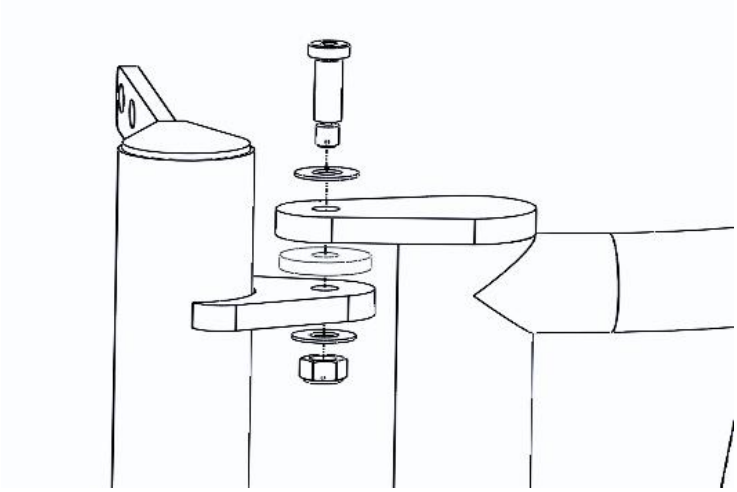

3. Remove the tail light to have access to the upper hinge.
4. Remove the 3 required bolts on the upper and lower hinge.
5. Position the vertical pole of the tire rack and replace the hinge bolts.
6. When replacing the tail light, in rare cases you may need to notch the plastic housing on the tail light for the tire rack support bar to clear. In most cases the tail light will snap back in place without any modifications. It is normal for the lower part of the tail light to sit slightly further out while still snapping in place.
7. Close the tire arm with the latch pin captured in the latch and mark the desired location of the latch pin. Drill two ¼" holes and fasten the latch pin to the bumper.
8. Check to make sure all hardware is tight.

TORQUE SPECIFICATIONS			
SIZE (SAE)	18-8 SS	GRADE 5 ZINC PLATED	GRADE 8 ZINC PLATED
6-32 (IN-LBS)	9.6	15.3	21.5
8-32 (IN-LBS)	19.8	29.5	41.7
10-24 (IN-LBS)	22.8	47.0	62.9
10-32 (IN-LBS)	31.7	48.0	68.0
1/4-20 (IN-LBS)	75.2	91	129
5/16-18 (IN-LBS)	132	188	265
3/8-16 (FT-LBS)	20	28	39
7/16-14 (FT-LBS)	31	44	63
1/2-13 (FT-LBS)	43	68	96
9/16-12 (FT-LBS)	57	109	226
SIZE (Metric)	18-8 SS	CLASS 8.8 ZINC PLATED	CLASS 10.9 ZINC PLATED
M5 X 0.8 (IN-LBS)	38.4	46.8	66.0
M6 X 1.0 (IN-LBS)	57.6	79.2	112.8
M8 X 1.25 (IN-LBS)	99.6	192.0	274.8
M10 X 1.5 (FT-LBS)	13.8	31.6	45.2
M12 X 1.75 (FT-LBS)	21.0	55.1	78.9
M14 X 2.0 (FT-LBS)	29.4	88.1	126.1

Aluminess Products Inc
Info@Aluminess.com
619-449-9930

Aluminess Products, Inc. (Aluminess) Warranty

1. Lifetime Warranty. Aluminess provides a lifetime warranty of its products to the original retail purchaser provided such products are installed correctly according to the official Aluminess installation instructions. Any modification to the original product design, function or use of any Aluminess products will void the Aluminess warranty. Aluminess will have sole discretion to determine warranty eligibility for any and all Aluminess products sold to any purchaser.
2. Limited Remedies. Subject to any limitations and exclusions described herein, and subject to Aluminess' determination of warranty eligibility, Aluminess will remedy defects in product materials and/or workmanship of any product by repairing or replacing such defective product, which shall be within Aluminess' sole discretion, without charge for parts or labor. Aluminess may elect in its sole discretion not to replace a defective product and issue the purchaser a refund equal to the purchase price of any defective product or purchaser may elect to receive a credit (equal to such refund) toward the purchase of new Aluminess products. Repair or replacement of a defective product or providing a refund or credit to purchaser will be purchaser's exclusive remedy under this warranty. Damage to a purchaser's vehicle, cargo and/or any other person or property is expressly excluded from the Aluminess warranty.
3. Modification. Aluminess products are designed to be mounted to factory equipped vehicles. Aftermarket additions to such vehicle may or may not require modification of an Aluminess product. The Aluminess warranty does not extend to any Aluminess products that are modified to fit around other otherwise accommodate or be compatible with any aftermarket vehicle accessories or alterations. Aluminess does not guarantee fitment with any other aftermarket accessories or modified vehicle, and it is up to purchaser to determine fitment prior to purchasing any Aluminess product.
4. Damage. Damage to Aluminess products due to normal wear and tear, including, but not limited to, cosmetic issues and superficial scratches, or structural damage to an Aluminess product in connection with any vehicle collisions or other structural degradation in connection with the use of such vehicle (on road or off road) will not be covered by the Aluminess warranty. Additionally, any product user's misuse, neglect, overloading, improper maintenance or improper installation or repair of any Aluminess products are not covered under the Aluminess warranty.
5. Use of the Products. Aluminess products are designed for off road vehicle use. Installing Aluminess products on a vehicle may exceed the factory designed capabilities of such vehicle and could potentially lead to vehicle damage. Aluminess will not be responsible for any damage caused to a purchaser or user's vehicle or any vehicle accessories caused by the use of any Aluminess products. It is to the sole responsibility of purchaser to inspect and ensure that the intended vehicle and Aluminess products are suitable and compatible for travel on road and off road. No seller nor any manufacturer of Aluminess products will be liable for any loss, damage or injury directly or indirectly arising from the use of any Aluminess products. Before using any Aluminess products, the purchaser or user will determine the suitability of the product(s) for their intended use(s) and the purchaser or user shall assume all responsibility and risk in connection therewith.
6. DISCLAIMER. THE ALUMINESS WARRANTY IS EXPRESSLY MADE IN LIEU OF ANY AND ALL OTHER WARRANTIES, AND EXCEPT FOR THE ALUMINESS WARRANTY SET FORTH HEREIN, ALUMINESS MAKES NO WARRANTY WHATSOEVER WITH RESPECT TO ANY ALUMINESS PRODUCT, INCLUDING ANY WARRANTY OF MERCHANTABILITY AND FITNESS FOR A PARTICULAR PURPOSE, WHETHER EXPRESS OR IMPLIED BY LAW, COURSE OF DEALING, COURSE OF PERFORMANCE, USAGE OF TRADE, OR OTHERWISE.

EXCEPT FOR PURCHASER'S LIMITED REMEDIES SET FORTH HEREIN, IN NO EVENT WILL ALUMINESS BE LIABLE FOR ANY LOST PROFITS, LOST SALES, OR FOR ANY CONSEQUENTIAL, DIRECT, INDIRECT, INCIDENTAL, SPECIAL, EXEMPLARY OR PUNITIVE DAMAGES OR FOR ANY OTHER DAMAGES OF ANY KIND OR NATURE.

7. Compliance. Aluminess cannot guarantee that its products comply with all Federal, State, and/or local laws. Purchaser is advised to review local vehicle codes for compatibility prior to purchase to ensure that the installation and use of any Aluminess products does not violate any applicable laws.
8. Warranty Claim Submission. Purchaser will responsible for returning any defective product to Aluminess for warranty consideration and purchaser may be responsible for all costs associated with shipping the product to and from Aluminess. Prior to returning any product for warranty, purchaser must contact Aluminess Products Inc. for proper authorization.