info@aluminess
(619) 449-9930

Ladder Installation Instructions

P/N 210567, 210567.1: 2013+ Dodge Promaster Rear Door Ladder, Driver's Side



Before you begin:

- *Stainless steel hardware may bind together when tightening — apply an anti-seize assembly lubricant to the threads of each bolt before assembly*
- *This installation requires two or more people*
- *This installation requires the license plate and license plate light to be relocated. Electrical connections must be made – Professional Installation Required*
- *Unless otherwise specified, refer to the general torque value at the end of the instructions for specified torque values*

Required Tools:

- Standard and metric wrench set
- Standard and metric socket set
- Standard/Metric Allen Keys or Hex Sockets
- Torx bit set
- Breaker bar (*Strongly advised not to use an impact gun*)
- Tin-snips or Heavy Duty Cutting Pliers (*For cutting weather stripping*)
- Isopropyl Alcohol
- Baby Soap or Dish Soap
- Spray Bottle
- Clean Rag
- Squeegee (or old credit card)
- Vice grips
- Door panel plastic rivet puller or Flat Head Screw Driver
- Scissor/Floor Jack (Optional, for supporting door)

Included Hardware:

P/N	***Description***	***Quantity***
70344	5/16"-18 x 1" Button Head Bolt, BLACK OXIDE	6
70345	5/16" ID Washer, BLACK OXIDE	12
70346	5/16"-18 Nylon-Locking Nut, BLACK OXIDE	6
400999	Impact Resistant Protective Tape	14.5”
70448	Washer, 5/16" ID x 3/4 OD, 125 thk	2
70462	Bolt, 6-32 x 1", Full Thread, Socket Cap, Black Oxide	2
70002	Washer, SAE Flat, SS, #8	2
70461	Nut, Nylock, 6-32, SS	2
70733	1-3/4" ID Conduit Clamp EPMD	2
70060	Bolt, Button Head, Socket Cap, SS, 1/4-20 x 1"	4
70009	Washer, 1/4" ID x 5/8" OD, Flat, SS	4
70008	Nut, 1/4"-20, Nylock, SS	5
401022	Webbing Anchor *(For door stop strap mounting)*	1
70079	Screw, Pan Head Phillips, SS, 10-32 x 1/2"	2

70005	Washer, #10, SAE Flat, SS	2
70004	Nut, Nylock, 10-32, SS	2
70041	Nut, Hex, Zinc, Steel, 1/4-20	2
70011	Bolt, 1/4"-20 x 3/4", Hex Head, SS	1
70447	Bolt, Hex, 1/4-20 X 3 1/4", Full Thread, Zinc	1
70477	Bolt, CS Flat Head, M8-1.5X 30mm, SS	1
70437	Bolt, Button Head, M6-1.0 X 16mm, SS	4
70246	Antiseize Bolt Lubricant Packet, 2g	1

Additional Parts:

PN	***Description***	***Quantity***	***Picture***
350682	Upper Hinge Bracket	1 ea	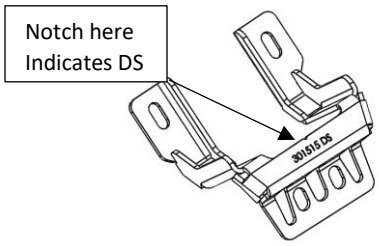
350684	Lower Hinge Bracket	1 ea	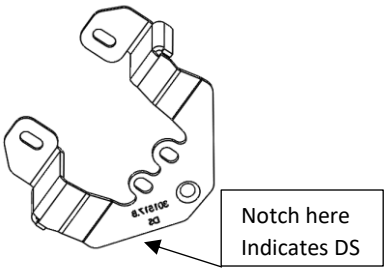
350686	Inner Driver Door Bracket, Driver	1 ea	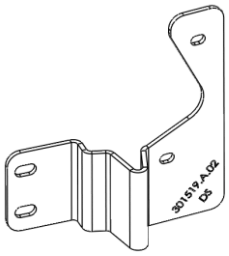
350688	Door Stop Channel	1 ea	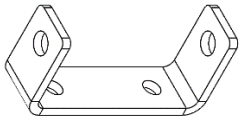
401035	Door Strap	1 ea	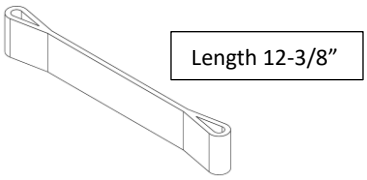

350749	License Plate Mount	1 ea
400508	LED Light	1 ea

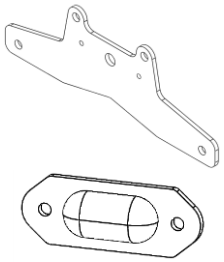

Ladder Installation:

Pre-install Prep:

1. Cut the supplied protective tape into one – 4.5” section, one - 3” section, and one -7” section. Round all corners.
2. Apply the protective tape to each location, one at a time, using the following wet application technique described below.
3. Prepare the surface for protective film application (wet application technique):
    a. Clean the area around each hinge with isopropyl alcohol and rag.
    b. Wash your hands thoroughly.
    c. Do not apply in direct sunlight
    d. Apply in temperatures above 60°F.
    e. Create two separate wetting solutions:
        i. Soap/water: ~95% water / ~5% soap
        ii. Alcohol/water: ~75% water, ~25% isopropyl alcohol
4. Spray the surface thoroughly with soap/water solution and do not wipe down surface.
5. Remove the liner from the protective tape while spraying the adhesive side with soap/water solution.
6. Apply the protective tape to the outside of the door (Figure 1). At the upper and lower hinge location, leaving approximately ½” of tape overhanging to be wrapped around the edge of the door. Leave the tape overhanging for now.

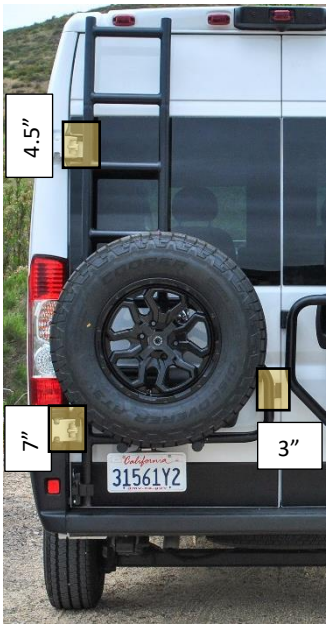

Figure 1: Locations of Protective Film Application

7. Use a squeegee to press all air bubbles out starting at adhered edge.
8. Use the alcohol/water solution to speed up adhesion at one edge (lift section up and spray adhesive side) as needed.
9. Wrap remaining protective tape around the door underneath hinge if possible.

Upper Bracket Installation:

10. Install the upper hinge bracket by:
    a. Support the weight of the door by using a floor/scissor jack/piece of wood or recruit a helper to assist. (Figure 2)

info@aluminess
(619) 449-9930



Figure 2: Support Door Prior to Installation

b. Remove the two bolts connecting the upper hinge to the door. (Figure 3)

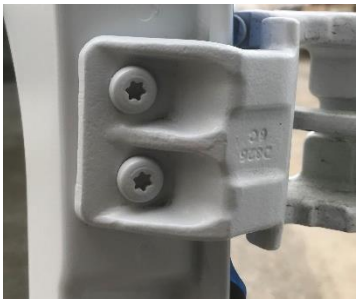

Figure 3: Top Hinge View

c. Rotate hinge to allow the bracket to be installed around the hinge (Figure 4).



Figure 4: Upper Hinge Rotated Away from Door

d. Install the bracket around the hinge in the correct orientation (Figure 5).



Figure 5: Bracket Installed Over Factory Hinge

e. Swing hinge and bracket back into position against the door. (Figure 6)



Figure 6: Bracket Installed Over Factory Hinge

f. Confirm that bracket clears the rear door glass *(if applicable*) and use the factory hardware to reinstall the hinge/bracket (Figure 7).

PRO TIP: Be sure to center the bracket around the hinge and verify clearances around the hinge while slowly opening and closing the door.



Figure 7: Inside View of Installed Upper Hinge Bracket

Lower Bracket Installation:

11. Install the lower hinge bracket by repeating the process detailed in Step 10. Be advised that one of three factory bolts will need to be replaced with supplied M8 counter sunk bolt. (Reference Figure 8 and 9).



Figure 8: Inside View of Lower Hinge



Figure 9: Inside View of Installed Lower Hinge Bracket

Inner Bracket Installation:

12. Loosen the weather-stripping on the inside of the driver's side door starting from the top and peel towards bottom of the door.
13. Remove the driver's side inside handle by removing the factory socket head bolt (See Figure 10).



Figure 10: Driver's Side Inside Handle

14. Hold lever mounting post with clamp or vice during the installation to prevent the latch falling into the door (Figure 11). Once clamped remove the two factory torx screws.



Figure 11: Clamp Lever Mounting Post

15. Install the inner driver door bracket using the supplied M6-1X16mm hardware. (See Figure 12).



Figure 12: Inner Driver Door Bracket Installed

16. Reinstall the inside door handle over the bracket using the factory bolt.
17. Verify the inside door handle operates as desired. Repeat Steps 16-17 as needed.

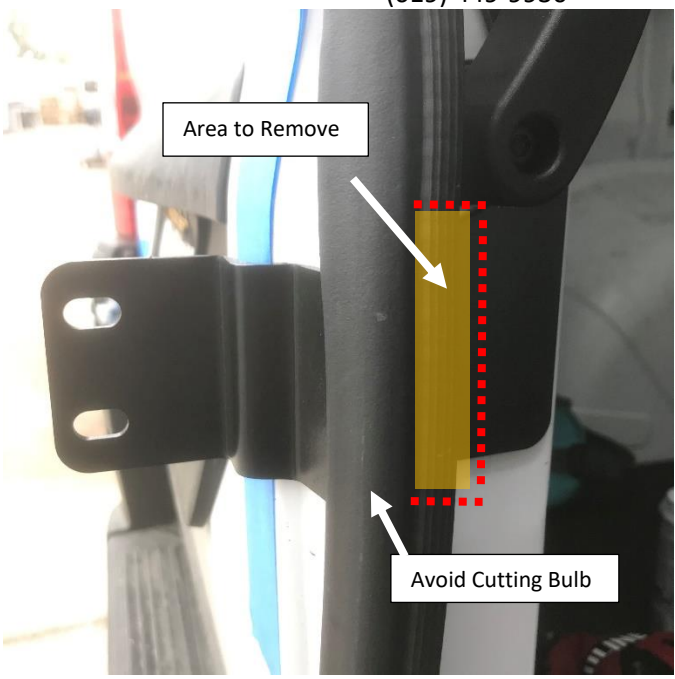

Figure 13: Weather-Stripping Cut to Shape

18. Reinstall weather stripping over installed inner bracket and mark where strip overlaps bracket. Peel back weather-stripping again and proceed to cut marked region to fit around inner door bracket. (Refer to figure 13 and 14) On the weather-stripping, cut the channel (attachment to the folded sheet metal) and not the bulb (hollow tube).



Figure 14: Cut Weather-Stripping

19. Reinstall weather-stripping over the bracket ensuring cut section lines up with bracket as shown in figure 15.



Figure 15: Installed Weather Stripping After Modification

20. Loosely install the rack onto the upper, lower, and inner brackets using the provided 5/16”-18 bolts, washers, and nuts.
    a. Tighten the upper and lower hinge brackets first.
    b. There should be a small gap at the center bracket before tightening (0-1/8”). If the gap is larger than 1/8”, use the provided 1/8” washers as shims (PN 70448) to close the gap to ≤ 1/8” (See Figure 16).

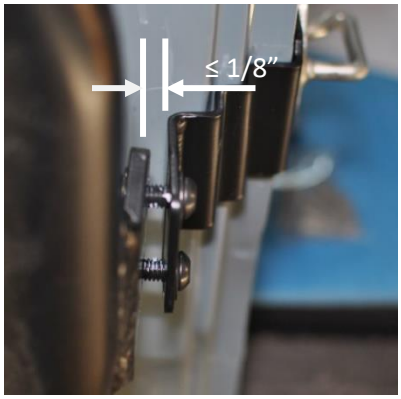

Figure 16: Installed Weather Stripping After Modification

Verify the hinge brackets and inner door brackets have appropriate clearances while slowly opening and closing both rear doors.

Door Stop Installation:

21. Install Door Stop Channel Bracket [PN 350688] into factory threaded holes on the inside of the rear door trim using two M6-1X16mm Button Head screws. (Figure 17 and Parts List)



Figure 17: Factory Threaded Holes

22. Remove plug grommet on door (*if applicable*) to expose mounting point.
    (Figure 18)



Figure 18: Remove Rubber Door Grommet

23. Partially remove door panel cover by carefully prying out push fasteners. This will give you access to the back of the mounting point. (See Figure 19)



Figure 19: Remove Plastic Door Rivets

PRO TIP: A door panel rivet puller like the one shown in FIGURE 20 makes this part of the install a breeze. A flathead screwdriver with some protective tape wrapped around the blade will work also.

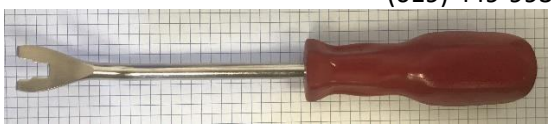

Figure 20: Door panel plastic rivet puller

24. Thread webbing anchor into door strap and mount webbing anchor as shown in figure 21 and 22.



Figure 21: Backside View of Door Stop Mounting

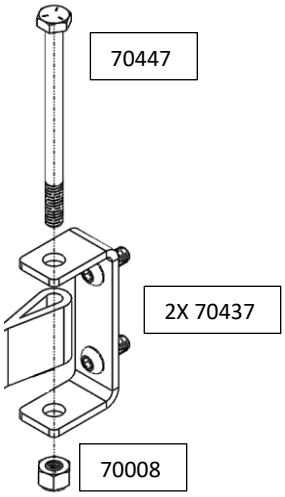

Figure 22: Door Stop Anchor Hardware

25. Thread other side of door stop strap into bracket installed on STEP 21 using ¼-20 x 3” bolt and ¼-20 Nylock nut. Refer to Figure 23 and Figure 24 for completed door stop install.

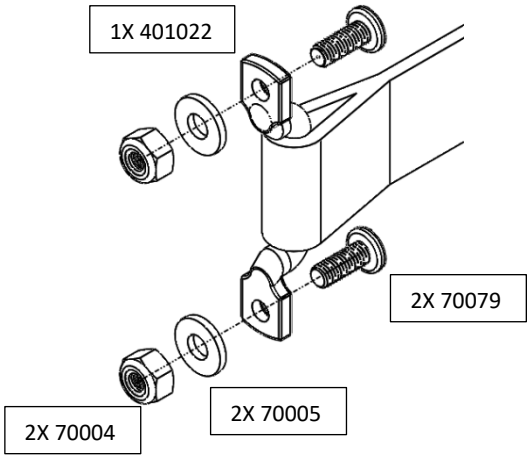

Figure 23: Door Stop Strap Mount Install

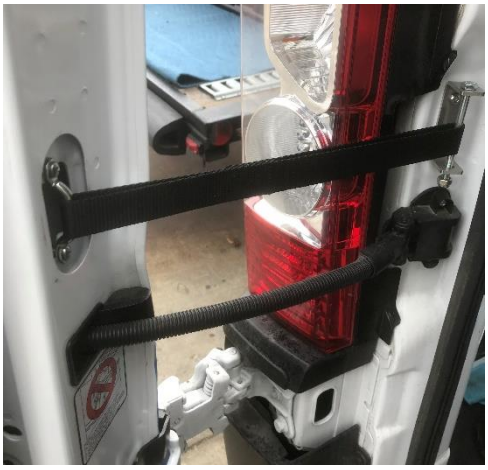

Figure 24: Completed Door Stop Install

26. Reinstall plastic door panel from Step 23.

License Plate Mount Installation:

27. Gather hardware to mount license plate mount. Remove license plate from vehicle and set aside. (Refer to Figure 25 and parts list)

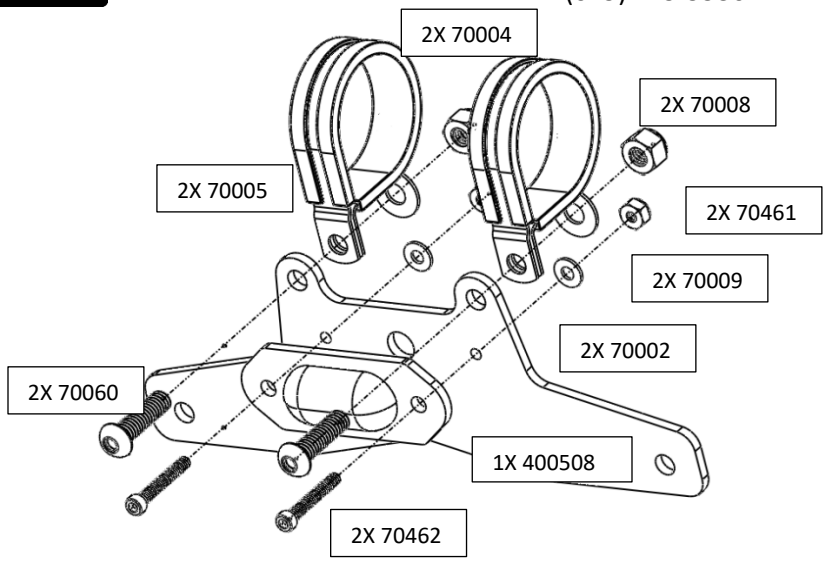

Figure 25: [350689] License Plate Mounting Hardware

28. Proceed to install license plate holder assembly. Reference Figure 26. Verify that position is correct. Proceed to tighten nuts.

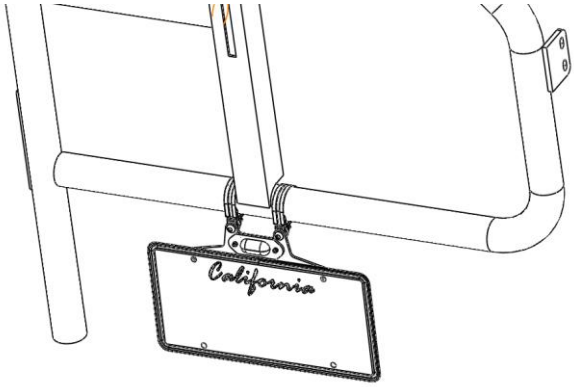

Figure 26: [350689] License Plate Holder Assembly

29. Install license plate onto mount using ¼-20 bolts (2X 70060) and ¼-20 Nylock nuts (2X 70008).

30. For bolt-on LED wiring (400508), please consult a certified automotive electrician to perform installation.

31. Congratulations! You have completed the installation of your new Aluminess Ladder Rack. Check mounting hardware on entire ladder assembly after the first 100 miles of driving and periodically after.

info@aluminess
(619) 449-9930

TORQUE SPECIFICATIONS			
SIZE (SAE)	18-8 SS	GRADE 5 ZINC PLATED	GRADE 8 ZINC PLATED
6-32 (IN-LBS)	9.6	15.3	21.5
8-32 (IN-LBS)	19.8	29.5	41.7
10-24 (IN-LBS)	22.8	47.0	62.9
10-32 (IN-LBS)	31.7	48.0	68.0
1/4-20 (IN-LBS)	75.2	91	129
5/16-18 (IN-LBS)	132	188	265
3/8-16 (FT-LBS)	20	28	39
7/16-14 (FT-LBS)	31	44	63
1/2-13 (FT-LBS)	43	68	96
9/16-12 (FT-LBS)	57	109	226
SIZE (Metric)	18-8 SS	CLASS 8.8 ZINC PLATED	CLASS 10.9 ZINC PLATED
M5 X 0.8 (IN-LBS)	38.4	46.8	66.0
M6 X 1.0 (IN-LBS)	57.6	79.2	112.8
M8 X 1.25 (IN-LBS)	99.6	192.0	274.8
M10 X 1.5 (FT-LBS)	13.8	31.6	45.2
M12 X 1.75 (FT-LBS)	21.0	55.1	78.9
M14 X 2.0 (FT-LBS)	29.4	88.1	126.1

Aluminess Products, Inc. (Aluminess) Warranty

1. Lifetime Warranty. Aluminess provides a lifetime warranty of its products to the original retail purchaser provided such products are installed correctly according to the official Aluminess installation instructions. Any modification to the original product design, function or use of any Aluminess products will void the Aluminess warranty. Aluminess will have sole discretion to determine warranty eligibility for any and all Aluminess products sold to any purchaser.

2. Limited Remedies. Subject to any limitations and exclusions described herein, and subject to Aluminess' determination of warranty eligibility, Aluminess will remedy defects in product materials and/or workmanship of any product by repairing or replacing such defective product, which shall be within Aluminess' sole discretion, without charge for parts or labor. Aluminess may elect in its sole discretion not to replace a defective product and issue the purchaser a refund equal to the purchase price of any defective product or purchaser may elect to receive a credit (equal to such refund) toward the purchase of new Aluminess products. Repair or replacement of a defective product or providing a refund or credit to purchaser will be purchaser's exclusive remedy under this warranty. Damage to a purchaser's vehicle, cargo and/or any other person or property is expressly excluded from the Aluminess warranty.

3. Modification. Aluminess products are designed to be mounted to factory equipped vehicles. Aftermarket additions to such vehicle may or may not require modification of an Aluminess product. The Aluminess warranty does not extend to any Aluminess products that are modified to fit around other otherwise accommodate or be compatible with any aftermarket vehicle accessories or alterations. Aluminess does not guarantee fitment with any other aftermarket accessories or modified vehicle, and it is up to purchaser to determine fitment prior to purchasing any Aluminess product.

4. Damage. Damage to Aluminess products due to normal wear and tear, including, but not limited to, cosmetic issues and superficial scratches, or structural damage to an Aluminess product in connection with any vehicle collisions or other structural degradation in connection with the use of such vehicle (on road or off road) will not be covered by the Aluminess warranty. Additionally, any product user's misuse, neglect, overloading, improper maintenance or improper installation or repair of any Aluminess products are not covered under the Aluminess warranty.

5. Use of the Products. Aluminess products are designed for off road vehicle use. Installing Aluminess products on a vehicle may exceed the factory designed capabilities of such vehicle and could potentially lead to vehicle damage. Aluminess will not be responsible for any damage caused to a purchaser or user's vehicle or any vehicle accessories caused by the use of any Aluminess products. It is to the sole responsibility of purchaser to inspect and ensure that the intended vehicle and Aluminess products are suitable and compatible for travel on road and off road. No seller nor any manufacturer of Aluminess products will be liable for any loss, damage or injury directly or indirectly arising from the use of any Aluminess products. Before using any Aluminess products, the purchaser or user will determine the suitability of the product(s) for their intended use(s) and the purchaser or user shall assume all responsibility and risk in connection therewith.

6. DISCLAIMER. THE ALUMINESS WARRANTY IS EXPRESSLY MADE IN LIEU OF ANY AND ALL OTHER WARRANTIES, AND EXCEPT FOR THE ALUMINESS WARRANTY SET FORTH HEREIN, ALUMINESS MAKES NO WARRANTY WHATSOEVER WITH RESPECT TO ANY ALUMINESS PRODUCT, INCLUDING ANY WARRANTY OF MERCHANTABILITY AND FITNESS FOR A PARTICULAR PURPOSE, WHETHER EXPRESS OR IMPLIED BY LAW, COURSE OF DEALING, COURSE OF PERFORMANCE, USAGE OF TRADE, OR OTHERWISE.

EXCEPT FOR PURCHASER'S LIMITED REMEDIES SET FORTH HEREIN, IN NO EVENT WILL ALUMINESS BE LIABLE FOR ANY LOST PROFITS, LOST SALES, OR FOR ANY CONSEQUENTIAL, DIRECT, INDIRECT, INCIDENTAL, SPECIAL, EXEMPLARY OR PUNITIVE DAMAGES OR FOR ANY OTHER DAMAGES OF ANY KIND OR NATURE.

7. Compliance. Aluminess cannot guarantee that its products comply with all Federal, State, and/or local laws. Purchaser is advised to review local vehicle codes for compatibility prior to purchase to ensure that the installation and use of any Aluminess products does not violate any applicable laws.

8. Warranty Claim Submission. Purchaser will responsible for returning any defective product to Aluminess for warranty consideration and purchaser may be responsible for all costs associated with shipping the product to and from Aluminess. Prior to returning any product for warranty, purchaser must contact Aluminess Products Inc. for proper authorization.